Silhouet

Shower System

Article no.:	5795479	**EAN no.:**	5708516827795
Finish:	Brushed Brass PVD		
Series:	Silhouet		

Standard features:

Rub-Clean
Scalding protection (38ºC)
Adjustable Height
Integrated diverter
With wall plates & eccentric unions
3 spray modes
Head Shower max. 9 l/m / Hand Shower max. 9 l/m

Product features

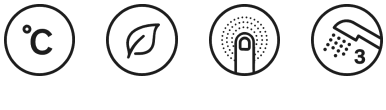

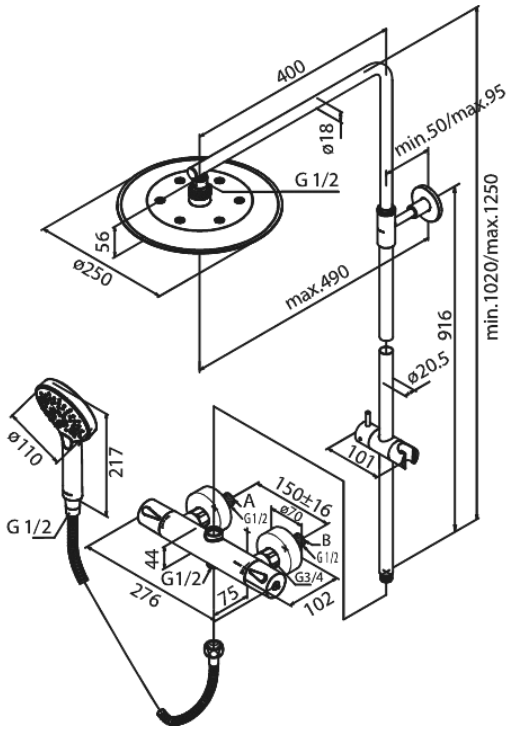

FM Mattsson Mora Group Denmark
Østbirkvej 2, DK-5240 Odense NØ

+45 88 33 00 34 damixa-international@fmm-mora.com

Mere information på https://damixa.com

damixa